YE3-225 B5

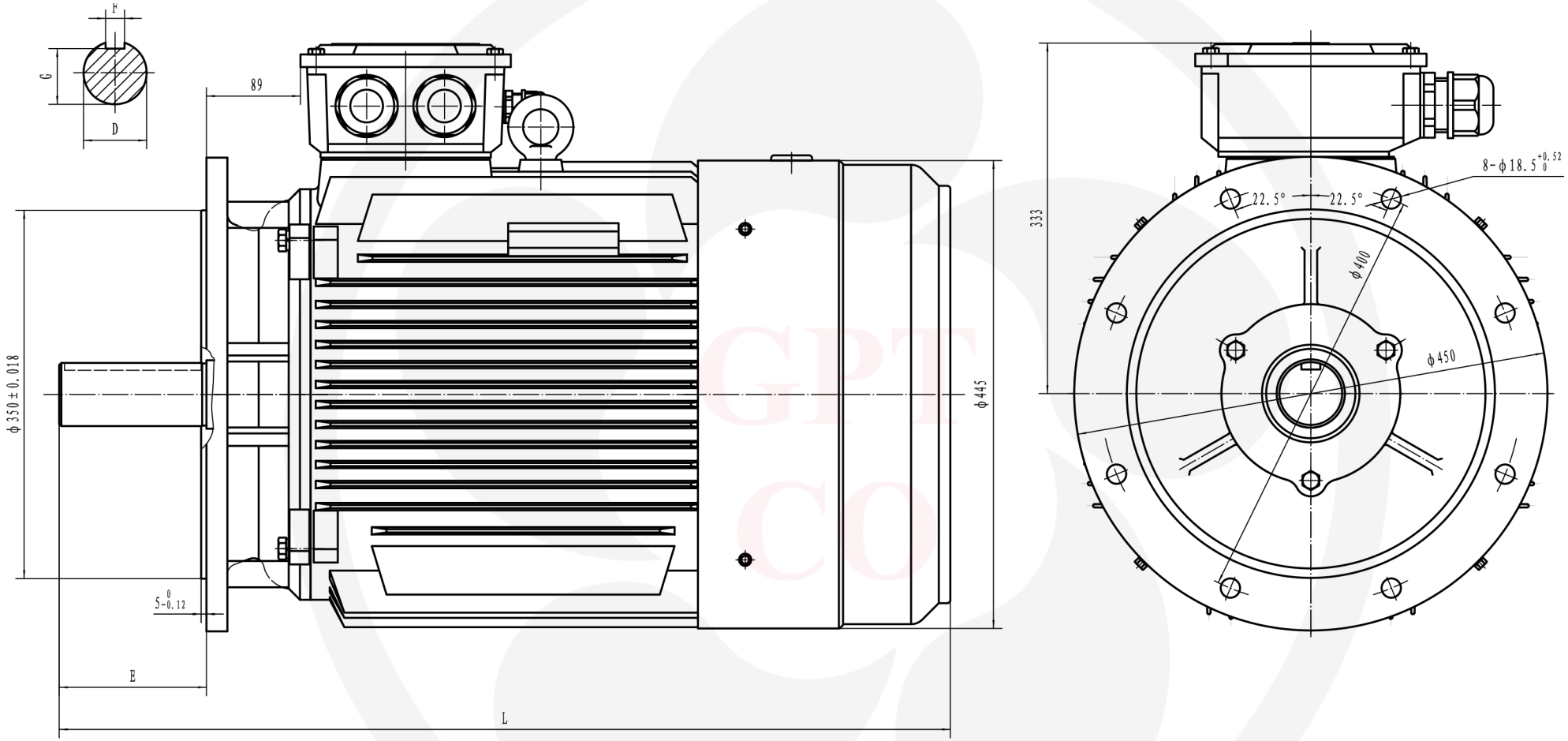

GOL PUMPS TECHNOLOGY INC

3750 NW114 AVE #6
MIAMI , FL 33178
Ph: +1 (786) 615 8984
Fax: +1 (786) 615 7043
Info@golpumps.com www.golpumps.com