Gol Pumps Thechnology

DATA SHEET

Sewage Pump

Gol Pumps Technology INC
www.golpumps.com
www.golpumps.us
Email : info@golpumps.com

Pump Data

Brand :	Gol Pump		
Model :	GPQ - 732 (CUT - ALL)		
Head Rate :	33 FEET	Flow Rate:	160 GPM
Head Max:	50 FEET	Flow Max:	346 GPM
Head Min:	3 FEET	Flow Min :	5 GPM
RPM :		1800	
Normal Power P1 :		7.5 HP	
Fluid:		Water	
Fluid Temperture:		at about 25 °C	
Density:		water 997 kg/m³	
Fluid Viscosity:		8.90 × 10–4 Pa·s	
With Float switch		NONE	
Self Priming		Submersible	
Delivery size		3" NPT	
Suction size		With Strainer	
Made in :		TAIWAN	

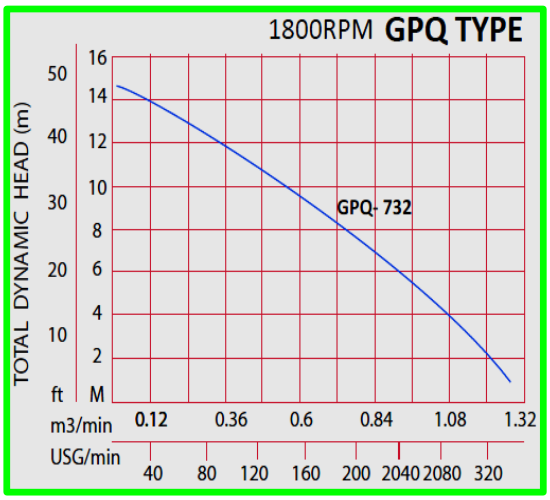

Motor Data

Power P2:	*	
Power P1:	5.5 KW	
Phase (PH):	3	
Rate Voltage :	480 V	
Capacitor Need :	*	μF
Ferequency :	60 Hz	
Rated Speed (rpm):	1800 rpm	
Current (A):	7.5 A	
Cos φ :	0.85	
Degree of Protection (IP):	IP 68	
Safety Protection Included:	*	
length of Cable :	5.5 × 10	mm2×m
Kind of Plug :	NONE	
Ambient Temp :	40°C = 104°F	

Other Pump Data

Impeller Size (mm) :	*
Pressuer Rating :	PN 16
Min. Fluid Temp :	10°C = 50°F
Max. Fluid Temp :	40°C = 104°F
Ambient Temp :	40°C = 104°F
Humidity % :	100%

Special Specification

Installation status :	Ver	
Variable frequency :	NONE	
Solid Passage	3	mm

Materials

Pump Body :	SUS 304
Support:	SUS 304
Impeller	SUS 304
Mechanical Seal:	Stainless Steel
Rubber	SUS 304
Pump Shaft:	SUS 410
Strainer	SUS 304
outer cover:	SUS 304
Motor:	SUS 304

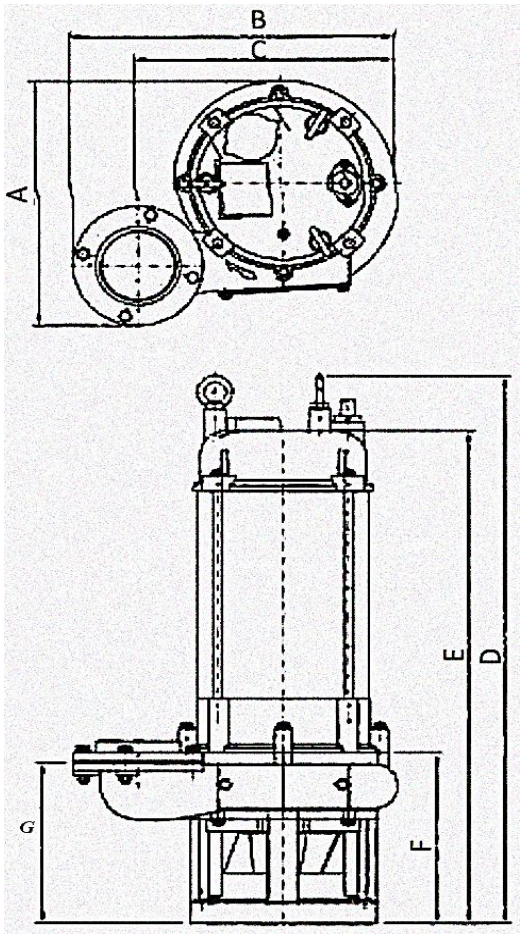

Shaft Seal

Type:	*
Stationary Part	STEEL PLATE
Rotating Part	STEEL PLATE
Elastomer	SUS 304

Pump and Motor specification optional

With Booster System	None
With Complack	None
Special Material	None
Specail Voltage	None

Protection system required

External Flout switch	NONE
Minimum Starter	Starter SWT

Weight : 83.5 Kg

Standard Approve

CSA

UL

CE

Applicant:

Ideal for Sewage Industrial & Groundwater Darainage

Installation in The Following Fields Sewage Pumping

Stations Sewage Treatment Plants Septic Tank Collecting

& Settling Sumps Flood & Emergency Liyvids With

Ropes Can Cable Plastic Botteles Piecces of Wood etc.

Dimention in	mm
A	307
B	376
C	301
D	686
E	616
F	214
G	200